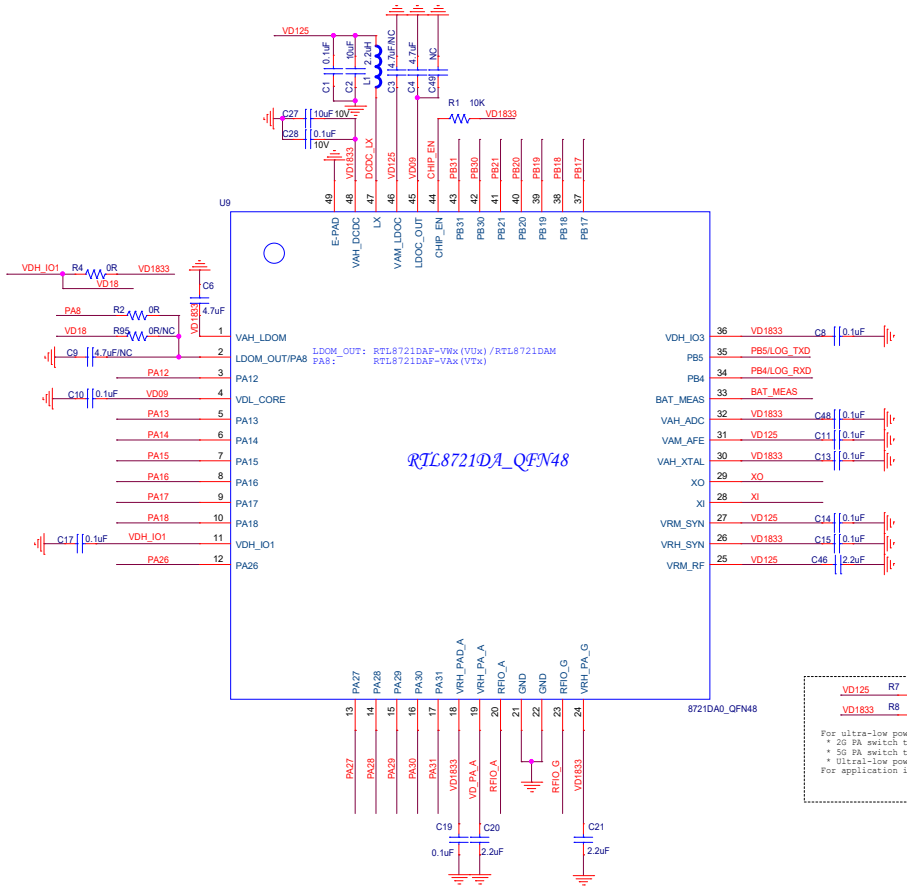

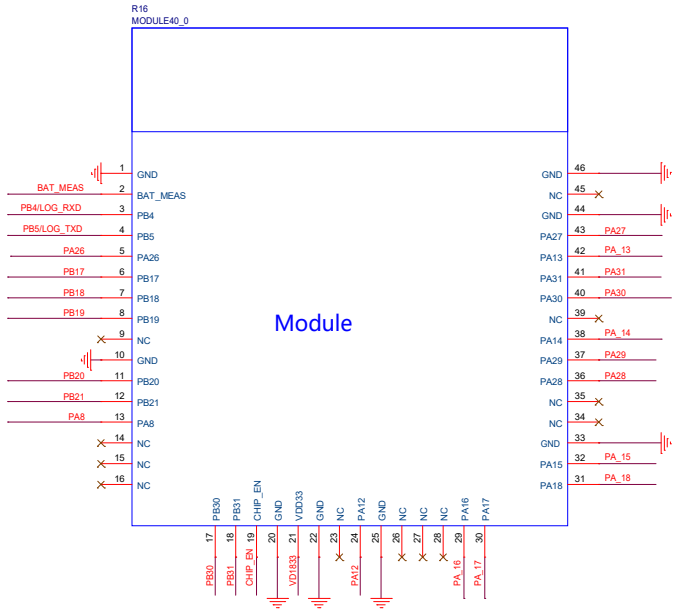

For ultra-low power mode
* 2G PA switch to 1.25V internally
* 5G PA switch to 1.25V by BOM change (R7 placed, R8 removed)
* Ultral-low power mode defined in efuse
For application in normal mode, please connect VDH_PA_A to VD1833 directly

XTAL

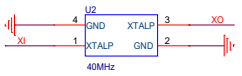

RF

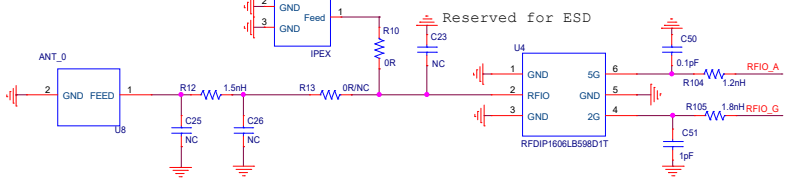

Flash

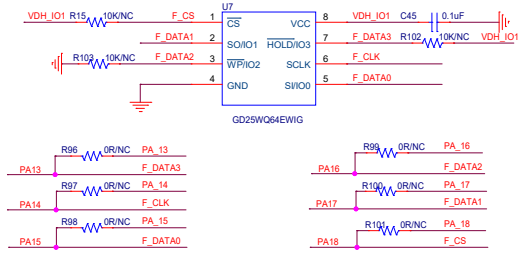

Module Pin Side — 220R — IC Pin Side
TVS

For module pins that require an E-gun test, such as CHIP_EN or UART, adding a TVS Diode and a serial resistor is recommended

Title	AD PLUS	
Size C	Document Number <>	Rev 1.0
Date:	Sheet 1 of 1	