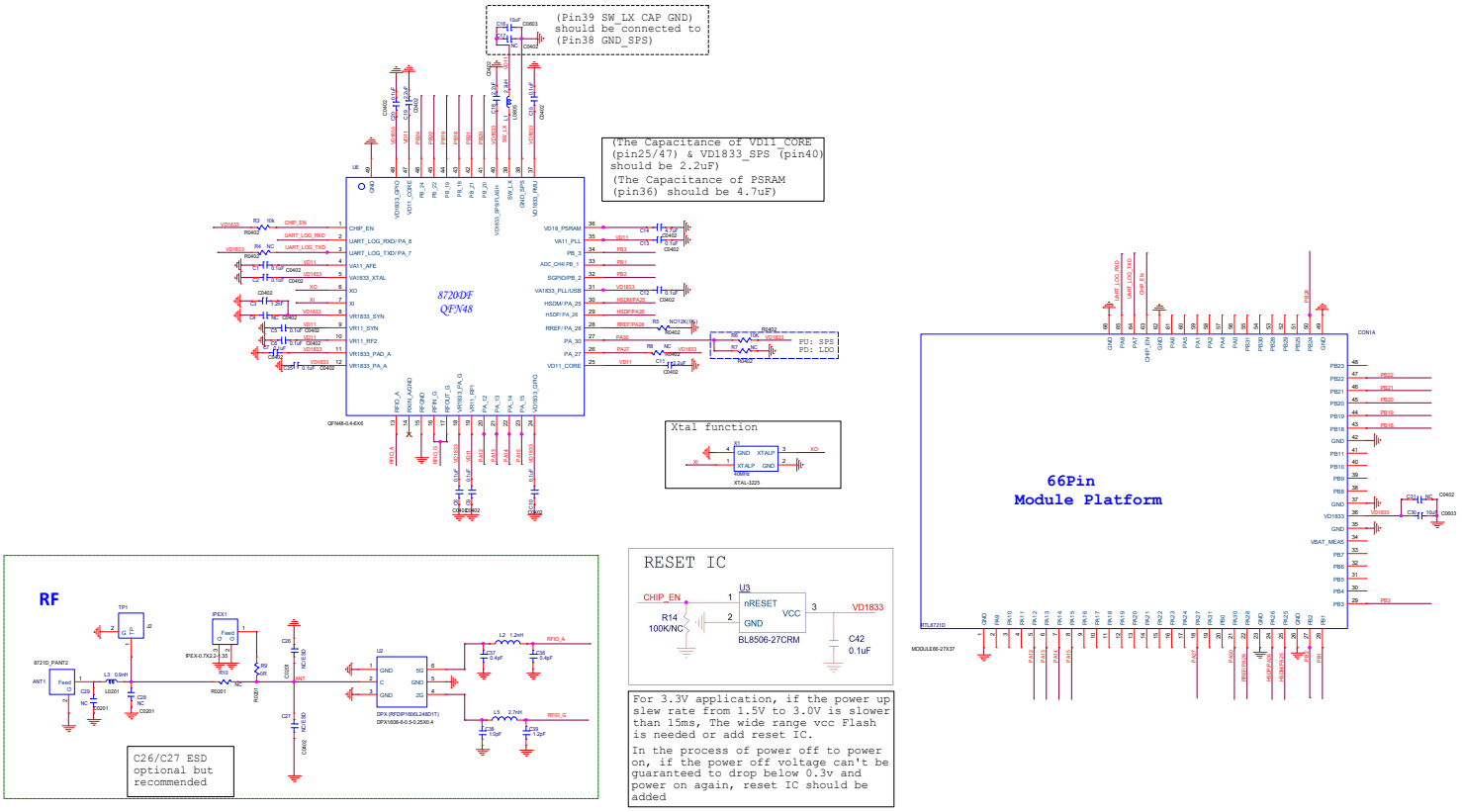
(Pin39 SW_LX CAP GND)
should be connected to
(Pin38 GND_SPS)
(The Capacitance of VD11_CORE (pin25/47) & VD1833_SPS (pin40) should be 2.2uF)
(The Capacitance of PSRAM (pin36) should be 4.7uF)
8720DF
QFN48
QFN48-0.4-6X6
PU: SPS
PD: LDO
Xtal function
XTAL-3225
66Pin
Module Platform
MODULE66-27X37
RTL8721D
RESET IC
CHIP_EN
R14
100K/NC
U3
nRESET
GND
VCC
BL8506-27CRM
VD1833
C42
0.1uF
RF
TP1
IPEX1
IPEX-0.7X2.2
8721D_PANT2
ANT1
L3 0.0nH
L2 1.2nH
L3 2.7nH
U2
DPX (RFDBF1606L2480T)
DPX1608-4-0.5-0.25X0.4
RFIO_A
RFIO_G
C26/C27 ESD
optional but
recommended
For 3.3V application, if the power up slew rate from 1.5V to 3.0V is slower than 15ms, The wide range vcc Flash is needed or add reset IC.
In the process of power off to power on, if the power off voltage can't be guaranteed to drop below 0.3v and power on again, reset IC should be added
<Variant Name>
File
RTL8720DF-2V1
Size
Custom
Document Number
<Doc>
Rev
<Rev>
Date:
Tuesday, March 02, 2021
Sheet
1
of
1